सत्यमेव जयते

Government of India
Bhabha Atomic Research Centre
Technical Physics Division

Ref: BARC/TPD/SLTPS/JAG/2022/MFAB/ 38963 27-04-2022

Sub: Supply and Fabrication of ladder, aluminum panel, chain pulley & load shifting (As per Annexure-I)

(Due Date:11.05.2022)

Dear Sirs,

Quotation in sealed envelope is invited for and on behalf of The President of India for the above-mentioned job as per the attached drawings. You are hereby required to quote as per the following guidelines:

1. The quotations in duplicate must reach to the **Head, Technical Physics Division on or before 11/05/2022 in a sealed envelope, super scribed with the reference number and due date given above by registered post/speed post**.
2. The quotations are to be sent only in **printed letter head / quotation format, which should consist of GST, Sales Tax Registration Number registered with local ST authority / CST authority, PAN Number of the firm, Service Tax Registration Number etc**. Quotations that are received in computer generated form are to be constructed as invalid and rejected.
3. Taxes and duties etc. shall be quoted separately.
4. The address for posting the quotation is :

   The Head, (Attn: **Dr. Jagannath)**
   Technical Physics Division
   Bhabha Atomic Research Centre
   Trombay, Mumbai 400085.
5. Good quality material from reputed supplier to be used for the job.
6. The bidder shall have to take an insurance policy against any material issued to him by the department.
7. The work shall be subject to inspection by our representative before transporting to Site.
8. Final drawing will be made available after issue of order.
9. Any change, alteration etc. must be approved by the purchaser.
10. Bidder is supposed to submit his PAN Number.
11. Head, TPD, BARC, reserves the right to accept/reject any or all quotations without assigning any reason.
12. Terms and conditions are mentioned in Annexure 'B'. **Job completion period should be within 60 days.**
13. The **offer should be inclusive of all the charges** or vendor should mention the charges separately. The price and charges will be fixed and **no escalation** will be applicable. **Any charges written as Extra / on Actual etc will not be considered and the quotation will be treated as invalid.**
14. **Party may contact on 022 25595370 or e-mail to ssai@barc.gov.in for any queries**
15. Police Verification Certificate is must for entry inside the BARC.

Annexure-B

Price : Inclusive of free and safe delivery at our site. Price once quoted & accepted shall remain final.

Taxes : GST as applicable may be specified separately.
: Income Tax @ 2% as applicable at the time of payment will be deducted from your bill.
: For payment above Rs. 2, 00,000=00, work contract tax @2% or as applicable shall also be deducted.

Excise Duty : Nil, *Excise duty is not payable by the Purchaser. Exemption certificate will be provided.

Octroi Duty: Nil. Exemption certificate will be provided for the end product on specific request as applicable.

Delivery : The work should be complete within **60 days**.

Payment : Payment will be made only after satisfactory completion of work and on submission of printed Delivery Challan, Bill cum Invoice in Triplicate and an Advanced Stamped Receipt for the amount of the bill. Payment exceeding Rs 20,000/- are subject to Income Tax Deduction at source, Surcharge, Education Cess on Income tax etc as applicable under Income Tax Act will be deducted from your bill.

Penalty Clause: Any delay which is attributed to the contractor is liable for penalty @ ½ % per week (max. 5%) to be imposed on the contractor.

Extension clause:

In case any extension is required due to unavoidable reason, please send a request before expiry of work order justifying the delay. However, granting extension is sole discretion of Head, TPD.

Note : Quotations, challans, invoice, receipt etc should be in printed form only. These should consist of VAT / Sales Tax /GST Registration Number registered with local ST authority / CST authority, PAN Number of the firm, Service Tax Registration Number, etc.

Quality Surveillance, Inspection and Inspection report : All work covered by the specifications shall be subject to quality surveillance by the purchaser or his authorised representatives for which purpose the fabricator shall allow access at all reasonable times during manufacture to :

1. The premises in which work is being carried out.
2. The drawings and / or tooling involved.
3. Gauges, instruments etc. required for inspecting the work.

Inspection and tests shall be carried out by the fabricator as per the requirements detailed in the drawings and these specifications. Components found unsatisfactory as to workmanship or material shall be removed by fabricator and replaced by components, which are satisfactory.
The finished components shall not be despatched prior to our approval.

Confidentiality: No party shall disclose any information to any third party concerning the matters under this contract generally. In particular, any information identified as "Proprietary" in nature shall be kept strictly confidential by the receiving party and shall not be disclosed to any third party without the prior written consent of the original disclosing party.
The clause shall apply to the sub-contractors, advisers, or employees engaged by a party with equal force.

1. "Restricted information" categories under Section 18 of the Atomic Energy Act 1962 and "Official Secrets" under Section 5 of the Official Secrets Act ,1923 :-
   Any contravention of the above-mentioned provisions by any contractor, sub-contractor, consultant, adviser or the employees of the contractor will invite penal consequences under the aforesaid legislation.
2. Prohibition against use of BARC's name without permission for publicity purposes :-
   The contractor, sub-contractor, consultant, adviser or the employees engaged by the contractor shall not use BARC's name for any publicity purpose through any public media like, Press, Radio, T.V., and Internet without the written approval of BARC. ***Excise Duty Clause** as mentioned vide circular No. *BARC/Accts/GSS/97/983* dated 14.7.97 is quoted below:

"*Since the goods to be supplied against this work order meant for research purpose of a Research Institute under the Department of Atomic Energy, No Excise Duty is payable for the goods covered by this work order. The Indenter shall make available the excise duty exemption certificate to avail of the Excise Duty exemption well before the delivery date*

Annexure- I

Job No. 1: Supply and Fabrication of platform ladder with railing: 1 No. (As per drawing below)

Sr. No	Specifications	Details
	Ladder height upto landing plate and Above landing plate Total height	2592mm 1000mm 3592mm
1	Material for structure (M. S.)	25mm.squre pipe
2	Material for railing (M. S.)	1" M.S. Pipe
3	Material for step (Aluminum)	6mm thick chequered plate Size: 150X550X6mm
4	Base plate (M. S.)	50X50X10mm Thick
5	Landing plate (Aluminum chequered plate)	6mm thick

Note: Painting process

All the M.S. frame/plates should be cleaned with polish paper and should be painted with two coats of red oxide and two coats of epoxy paint/ PU enameled gray color paint.

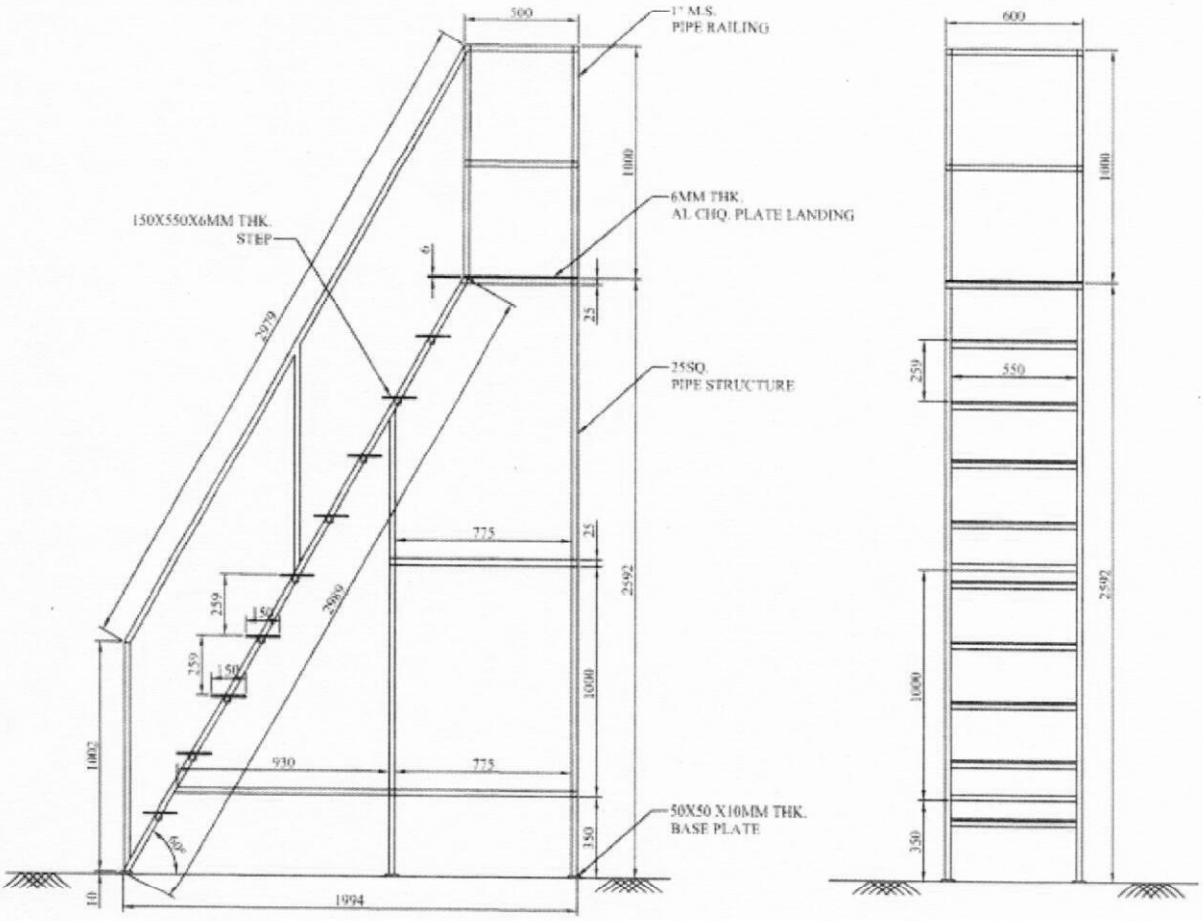

Fig 1: Platform Ladder

Job No. 2: Shifting and reassembly of overhead chain pulley block with frame as per specification and drawing (1 No.)

The job involves:

1. De-assembly of overhead chain pulley block (Fig 2) onsite. Manpower, ladder/ scissor lift arrangement and other equipment required for de-assembly is under supplier scope
2. Shifting of overhead chain pulley block with frame to final location (inside BARC). Truck, forklift, manpower is under supplier scope
3. Re-assembly of overhead chain pulley block (Fig 2) at final location. Manpower, ladder/ scissor lift arrangement and other equipment required for assembly is under supplier scope.
4. Supplier has to take responsibility of safety precautions of all the personnel carrying out the job
5. All safety gears have to be brought by supplier and worn at all the times while performing this job to prevent any injury.

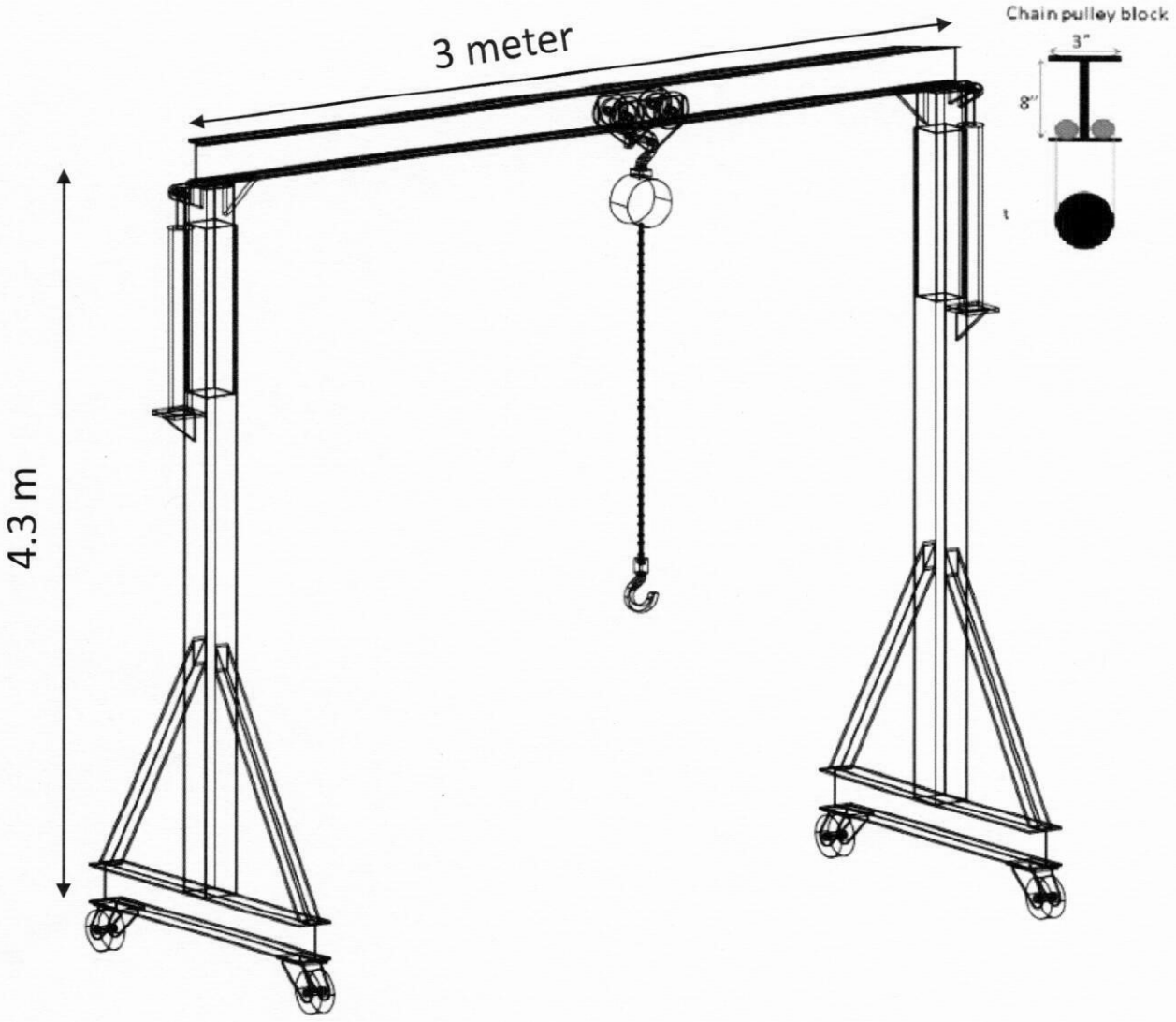

Fig 2: Overhead chain pulley block

Job No. 3: Load shifting and load testing with 6.25-ton Load for gantry crane

The job involves:

1. 5-ton Load (2 ton+3 ton or as available) + 1.25-ton load (Separate 25% overload) and compatible belt/rope with hook has to be provided by supplier. Load will be returned after testing.
2. Supplier has to arrange for transportation, loading and unloading of load to and from site
3. Forklift, pellet truck, manpower and any other equipment required for carrying out the job has to be arranged by the supplier inside BARC
4. Supplier has to carry out the load testing of the crane and also measure deflection of beam with load. Instrument for measuring deflection has to be arranged by supplier and will be returned after testing.
5. Supplier has to take responsibility of all safety precautions of all the personnel carrying out the job
6. All safety gears have to be brought by supplier and worn at all the times while performing this job to prevent any injury

Job No. 4: Supply, fabrication and installation of replacement aluminum panel including rubber and anodized aluminum frame (Panel Size: 1100 mm X 1100 mm.) Quantity: 12 Nos.

In the present job, supplier has to replace existing glass panels of aluminum frame partition with aluminum panel.

Dimensions and other details are given below:

Panel Size: 1100 mm X 1100 mm

Panel Quantity: 12 Nos.

Thickness: 3 mm

Color: Light Yellow (Powder coated)

Scope of supply:

1. Final measurement of panel size on site
2. Removal of glass panel
3. Fabrication and installation with new aluminum panels including rubber and anodized aluminum frame