Government of India
Bhabha Atomic Research Centre
Radiation & Photochemistry Division

Ref:- BARC/MF/RPCD/533/RBA4013/09 **Date:04/03/2022**

1. **Sub:- Invitation of quotation for *Fabrication, Supply, and installation of Pulse transformer, klystron filament transformer and DC reset Inductor/biasing Inductor for the Picosecond Electron Accelerator in CFB, BARC.***

Sealed quotations are invited on behalf of President of India by Head, Radiation & Photochemistry Division, BARC, Trombay, as per enclosed specification from the eligible contractors having adequate experience in similar works with the units of DAE, NPCIL, or Public Undertakings.

1. Bidder shall quote for the fabrication, transport and installation *of Pulse transformer, klystron filament transformer and DC reset Inductor/biasing Inductor* ***for the Picosecond Electron Accelerator in CFB, BARC*** *as per the detail given in the specifications.*

The quotation must reach Head, Radiation & Photochemistry Division by **21st March 2022, by 16.00 hrs** and must be sent in a sealed envelop. Sealed envelop should clearly indicate Name of work, Reference number & due date of submission. The address on the envelop should read as

The Head, Radiation & Photochemistry Division
Kind Attention-Veeresh K Nayak
Bhabha Atomic Research Centre, Trombay
Mumbai-400085

The offer should be valid for at least 60 days from the due date of the tender and quoted price shall remain firm during the period of execution of the work

The quotation should be submitted on printed letter head indicating all items separately such as: Material cost, fabrication cost, transport, installation, GST/VAT/Sales Tax. The Service Tax registration No., PAN number of the firm should also be mentioned clearly.

Sealed quotation should be submitted only through registered post/speed post through Indian Postal Service.

Taxes, duties and other charges if any shall be quoted separately.

The work should be completed **within 60 (Sixty) days from the date of issue of the work order**.

Head, Radiation and Photochemistry Division, reserves the right to accept/reject any or all quotation without assigning any reason.

TERMS AND CONDITIONS:

I. The acceptance of tender shall rest with department which does not bind itself to accept the lowest tender and reserves to itself the authority to reject any or all of the tenders received, without assigning any reason. All tenders in which any of the prescribed conditions are not fulfilled or incomplete in any respect are liable to be rejected.

II. Canvassing in connection with tenders is strictly prohibited and the tenders submitted by the contractors who resort to canvassing will be liable for rejection.

III. The Successful bidder whose tender is accepted will be required to obtain Police Verification Certificate (PVC) issued by Special Branch of Police at his own cost for all his workmen i.e. Supervisors and Labours. **This is necessary to work inside BARC and the bidder should quote accordingly**.

IV. The department reserves the right to accept the whole or only part of the tender and the tenderer shall be bound to perform the same at the rates quoted.
Contact for assistance/ clarifications **(022) 2559-6843/3732, veeresh@barc.gov.in**

Awadhesh Kumar
07.03.2022

Head, Radiation and Photochemistry Division
Bhabha Atomic Research Centre

डॉ. अवधेश कुमार / Dr. Awadhesh Kumar
अध्यक्ष, विकिरण एवं फोटोरसायनिकी प्रभाग
Head, Radiation & Photochemistry Division
बी.ए.आर.सी. / B.A.R.C.

Annexure "B"

Technical Specifications

Note: All mentioned material are in the scope of supply and Installation by the supplier

Ref

Sr. No	Descriptions
1.	Scope of work includes the following specific jobs: A. Fabrication of glass epoxy bobbins for primary and secondary windings. B. Pulse transformer primary and secondary winding with new primary and secondary bobbin and H class insulation copper wire as per the detail given in the specifications. ***Note:*** • ***2mil CRGO cores will be given by BARC for winding work. Cores are uncut type oval shape as mentioned in the core assembly drawing RRCAT/IRFEL/MOD/PT/08.*** • ***Final pulse transformer, klystron filament, and biasing inductor assembly mentioned in the technical specifications.*** C. Assembly of bobbins and winding of pulse transformer primaries and secondaries. D. Mounting input output terminals. E. Fabrication of corona ring and its mounting F. Fabrication of Klystron filament 5kv isolation transformer as mentioned in the specifications G. Fabrication of biasing inductor 20kv isolation as mentioned in the specifications H. Mounting of Pulse transformer klystron filament transformer, biasing inductor & CVD on foundation plate at PEA facility, CFB, BARC.
2.	Parts, quantities and material requirements: The required parts, quantities and scope of materials are given inTable1.

S.N.	Drawing No	Part No.	Quantity	Material (Retain applicable part)
1.	RRCAT/IRFEL /MOD/PT/03	250kV PULSE TRANSFORMER: Fresh rewinding of primary and secondary winding. Winding on primary and secondary bobbin as per the drawing by supplier aprox 5 parallel wire 5 turns on each primary bobbin(2 nos. Primary) and approx 70 turns on both (2 No. basket bobbin secondary) secondary windings. Note: Winding works need to be done onsite i.e. at CFB, BARC as per attached drawing and specifications.	1 No.	Supplier's scope
2.	RRCAT/IRFEL /MOD/PT/09	Supply and fabrication of Glass epoxy primary bobbin 3mm Sheet.	2 Nos.	Supplier's scope
3.	RRCAT/IRFEL /MOD/PT/11 Sheet 1 & 2	Supply and fabrication of Glass epoxy secondary bobbin 6mm Sheet.	2 Nos.	Supplier's scope
4.		17 SWG enameled copper conductor H Class insulator for Secondary winding	5kg	Supplier's scope
5.		14 SWG enameled copper conductor H Class insulator for Primary winding	3kg	Supplier's scope
6.	RRCAT/IRFEL /MOD/PT/14	Input/output Terminals strip copper material	As per drawing	Supplier's scope
7.		Glass epoxy support for klystron filament transformer	2 Nos.	Supplier's scope
8.		Adhesives	As required	Supplier's scope

	9.	RRCAT/IRFEL /MOD/PT/04	Supply and fabrication of Klystron filament transformer 5kV AMCC1000 Core Isolation Transformer as per the attached specifications.	1 No.	Supplier's scope
	10.	RRCAT/IRFEL /MOD/PT/07	Supply and fabrication of Biasing inductor as per the details given in the specifications.	1 No.	Supplier's scope
	11.		Supply and installation of 400V AC metallic film capacitor 3uF	5 Nos.	Supplier's scope
	12.	RRCAT/IRFEL /MOD/PT/13	Supply and Fabrication of corona ring and its mounting Material Aluminum 2.5kg	2 Nos.	Supplier's scope

3. **Inspection, testing and Acceptance criteria General:**

Responsibility of meeting the requirements, as specified in this document shall be with the supplier. The purchaser in general will have the role of verifying the quality control measures taken by the supplier. The purchaser will be free to inspect any part or component or the process and will take decision about acceptance or rejection of the process or the component as per this specification. In case of dispute, the decision of the purchaser will be final. The authorized representative appointed by the purchaser will have access to the fabricator's works at all reasonable times for the purpose of witnessing the fabrication, inspection and testing of individual items and complete structures.

Inspection:
Dimensional checking of all the components fabricated by the supplier as per the drawings shall be done at the fabricator's site before final assembly. Supplier must have complete facilities for measuring the dimensions and other parameters.
The purchaser reserves the right to witness any or all of the tests discussed above. Full details of the facility where the tests will be conducted should accompany the quotations. The purchaser's representative must also have access to these facilities to witness the tests, if required.

Testing and Acceptance
The following items are the minimum requirements for the acceptance.
A. Verification of the component dimensions as per the relevant drawings
B. Verification of the complete assembly as per the drawing and specification
C. Verification of turn ratio of pulse transformer and other equivalent circuit parameters
D.Megger test between primary and core, secondary and primary and secondary and core.

Credential:
Only those suppliers who have successfully executed similar type of work and cost are only eligible for the tender and need to submit their credential along with the quotation.

04/03/2022

Veeresh k Nayak
I/O

04/03/2022

(M. C Rath)
Head EAS

Awadhesh Kumar
07.03.2022
(Awadhesh Kumar)
Head RPCD, BARC

डॉ. अवधेशकुमार / Dr. Awadhesh Kumar
Head, Radiation & Photochemistry Division
बी.ए.आर.सी. / B.A.R.C.

Ref:

Klystron Filament isolation transformer specifications

2. Input voltage : 230 V AC 50Hz
3. Output current : 30A
4. Output voltage : 30V
5. VA: 900 VA
6. Regulation < 2%
7. Core material : AMCC 1000 , Amorphous core
8. Mounting : It will immersed in transformer oil and floating at klystron beam voltage of 250kV, 10us.

Fabrication details :-

1. Transformer should use AMCC 1000 , two pairs
2. Bobbins should be built using Epoxy of thickness 2mm.
3. Type of transformer : Shell type
4. Primary turns : 213, 20SWG x 7 wires
5. Inter layer insulation for primary: 3 mil inter layer Mylar sheet
6. Inter winding insulation : 3 mil x 4 layer Mylar
7. Secondary turns : 29 Turns , 12 SWG x 3 wires
8. Inter layer insulation for secondary : 3 mil x 3 inter layer Mylar sheet

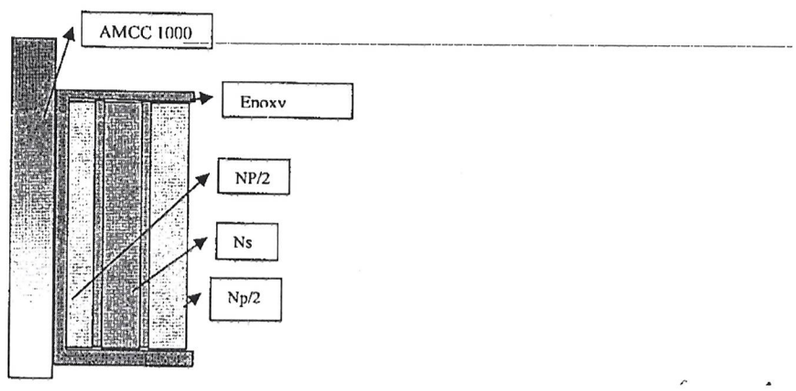

Recommended measurement on transformer
1. Measurement of turn ratio
2. Measurement of winding resistance

Charging Choke specifications:

1. Inductor pulse isolation 20kV between two terminal for 10us
2. Core Inductor 25mH
3. Inductor max current 15Amp
4. It will be immersed in the transformer oil
5. Inductor core material AMCC1000

04/03/2022

Veeresh k Nayak
I/O

04/03/2022

(M. C Rath)
Head EAS

Pulse transformer assembly reference images

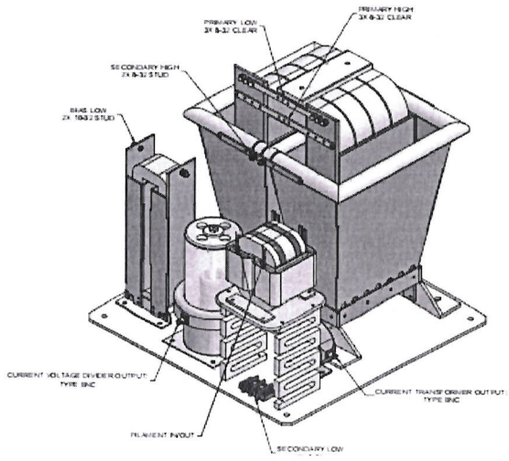

Image-1: Pulse transformer assembly

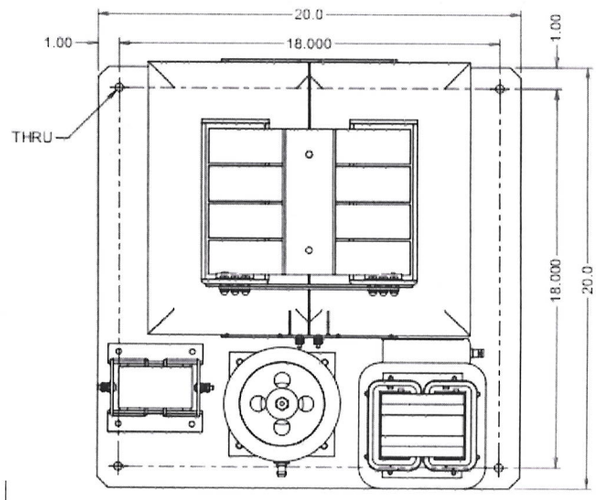

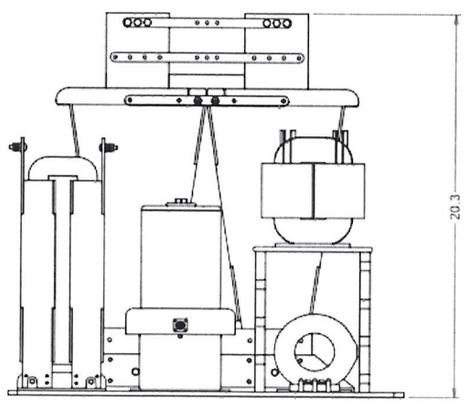

04/03/2022.

Veeresh k Nayak
I/O

04/03/2022

(M. C Rath)
Head EAS

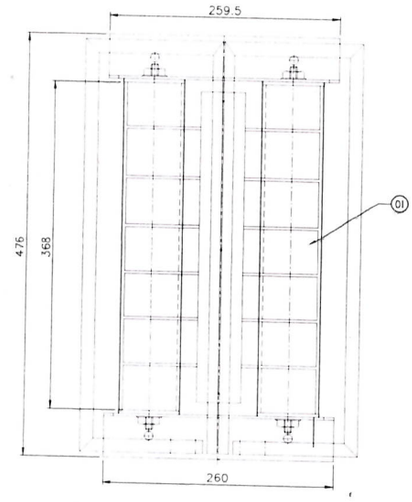

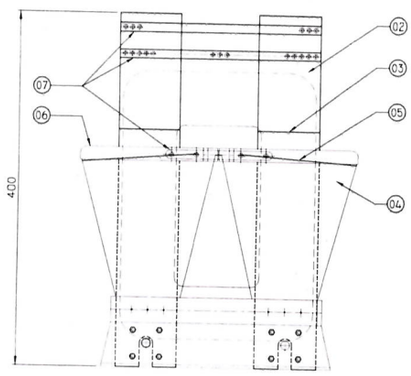

P. No.	DESCRIPTION	QTY	DRG NO.	REMARKS
06	CORONA RING	2	REF. RRCAT/IRFEL/MOD/PT/13	
05	SECONDARY WINDING	2	REF. RRCAT/IRFEL/MOD/PT/12	
04	SECONDARY BOBBIN	2	REF. RRCAT/IRFEL/MOD/PT/11	
03	PRIMARY WINDING	2	REF. RRCAT/IRFEL/MOD/PT/10	
02	PRIMARY BOBBIN	2	REF. RRCAT/IRFEL/MOD/PT/09	
01	CORE ASSEMBLY	1	REF. RRCAT/IRFEL/MOD/PT/08	

BILL OF MATERIAL

GENERAL TOLERANCES

GOVERNMENT OF INDIA
R R CENTRE FOR ADVANCED TECHNOLOGY
ACCELERATOR PROGRAMME

TITLE: 250 kV PULSE TRANSFORMER
(PULSE TRANSFORMER ASSEMBLY)

DRN. U.KALE	DATE	CHK.	DATE	SCALE NTS	
DRN. R.JAIN	DATE	APPD.	DATE		
ORIGINATING SECTION / GROUP	--				

DRG.NO.–RRCAT/IRFEL/MOD/PT/03 | SHEET -- | REV.NO. 0

SKETCH NO. EEE-2015/07/04/03/2021

04/03/2022

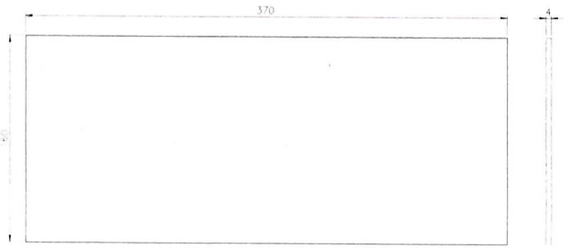

SIDE PLATE
QTY : 4Nos.
MAT : GLASS EPOXY

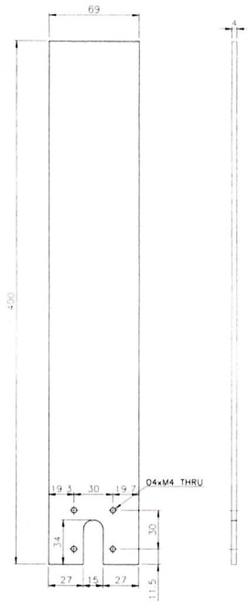

FRONT PLATE
QTY : 2Nos.
MAT : GLASS EPOXY

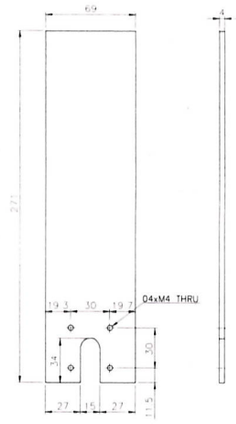

BACK PLATE
QTY : 2Nos.
MAT : GLASS EPOXY

GOVERNMENT OF INDIA
R R CENTRE FOR ADVANCED TECHNOLOGY
ACCELERATOR PROGRAMME

TITLE: PRIMARY BOBBIN (PULSE TRANSFORMER ASSEMBLY)

DSN: U.KALE	DATE	CHK	DATE	SCALE: NTS	
DRN: R.JAIN	DATE	APPD	DATE		
ORIGINATING SECTION / GROUP		--			
DRG.NO.-RRCAT/IRFEL/MOD/PT/09				SHEET --	REV NO. 0

SHEET NO. ICE-2016/10/04/E/003

04/03/2022

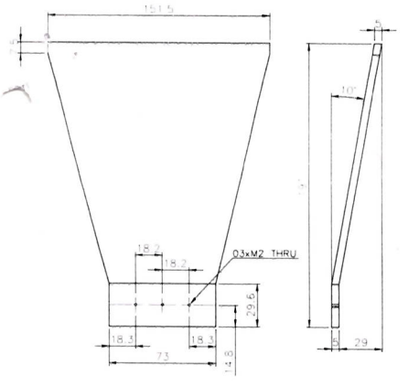

FRONT OF SECONDARY BOBBIN
QTY 4
MAT: GLASS EPOXY

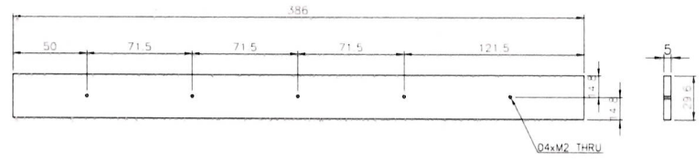

LH & RH SIDE SUPPORT PLATE OF SECONDARY BOBBIN
QTY 4
MAT: GLASS EPOXY

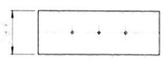

SUPPORT PLATE FOR
SECONDARY BOBBIN FRONT
QTY 2
MAT: GLASS EPOXY

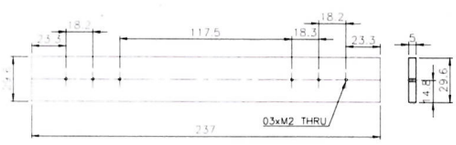

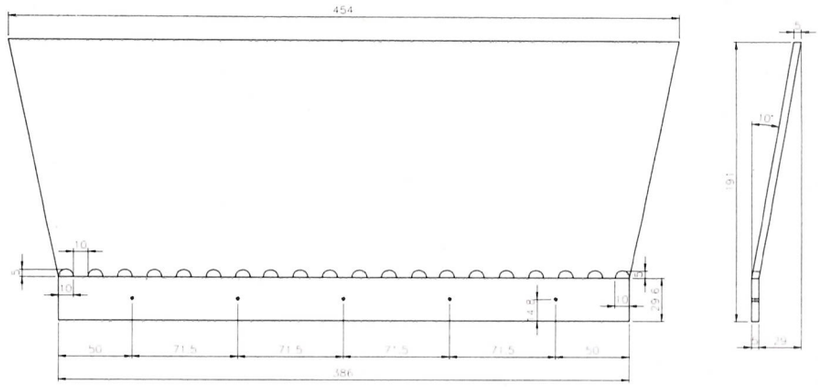

RH SIDE OF SECONDARY BOBBIN
QTY 2
MAT: GLASS EPOXY

GENERAL TOLERANCES

GOVERNMENT OF INDIA
R R CENTRE FOR ADVANCED TECHNOLOGY
ACCELERATOR PROGRAMME

TITLE	SECONDARY BOBBIN (PULE'S TRANSFORMER ASSEMBLY)				
DGN. U.KALE	DATE	CHK.	DATE	SCALE NTS	
DRN. R.JAIN	DATE	APPD.	DATE		
ORIGINATING SECTION / GROUP	--				
DRG.NO.-RRCAT/IRFEL/MOD/PT/11				SHEET 1 OF 2	REV.NO. 0

SKETCH NO. ECE-2015/20/04/RJ/0033

04/03/2022

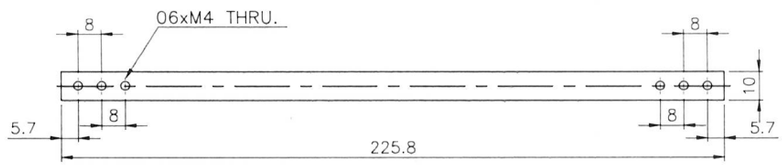

PRIMARY LO TERMINAL

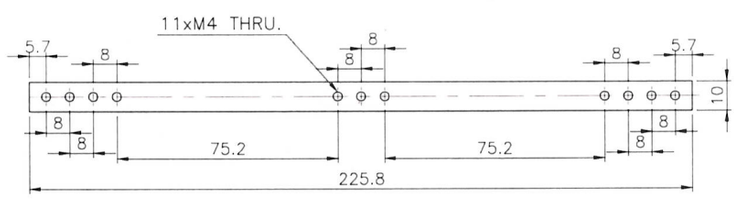

PRIMARY HI TERMINAL

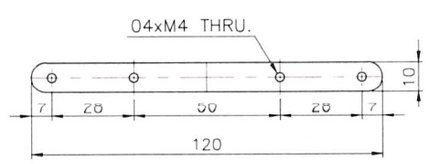

SECONDARY CONNECTION TERMINALS

04/03/2022

ALL DIMENSIONS ARE IN mm
REMOVE ALL SHARP EDGES & CORNERS

GENERAL TOLERANCES
LINEAR DIMENSIONS
0 TO 30 ± 0.2
30 TO 315 ± 0.5
315 TO 1000 ± 0.8
1000 TO 2000 ± 1.2
HOLE H12 SHAFT h12
UNLESS OTHERWISE SPECIFIED
THE SURFACE FINISH SHALL BE

GOVERNMENT OF INDIA
R R CENTRE FOR ADVANCED TECHNOLOGY
ACCELERATOR PROGRAMME
INDORE-452 013

TITLE	TERMINAL STRIPS (PULES TRANSFORMER ASSYEMBLY)		SCALE NTS
DESD. U.KALE	DATE	CHKD.	DATE
DRN. R.JAIN	DATE	APPD.	DATE
DRG.NO.: RRCAT/IRFEL/MOD/PT/14			SHEET

SKETCH NO. ECE-2015/25/03/RJ/0008

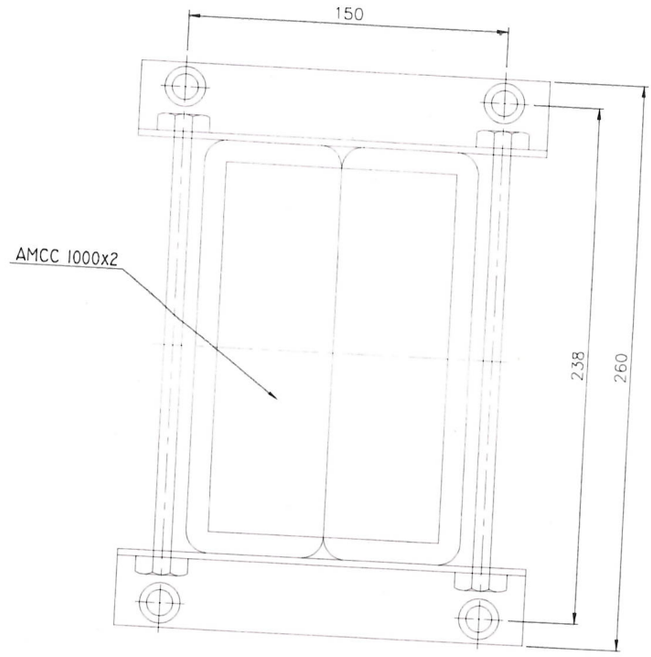

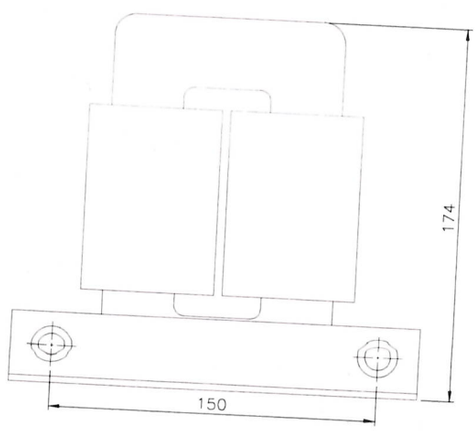

QTY : 1No.

04/03/2022

ALL DIMENSIONS ARE IN mm
REMOVE ALL SHARP EDGES & CORNERS

GENERAL TOLERANCES

LINEAR DIMENSIONS

0 TO 30	± 0.2
30 TO 315	± 0.5
315 TO 1000	± 0.8
1000 TO 2000	± 1.2

HOLE H12 SHAFT h12

UNLESS OTHERWISE SPECIFIED THE SURFACE FINISH SHALL BE ✓

GOVERNMENT OF INDIA

R.R CENTRE FOR ADVANCED TECHNOLOGY

ACCELERATOR PROGRAMME

INDORE-452 013

TITLE KLYSTRON FILAMENT TRANSFORMER (PULSE TRANSFORMER ASSYEMBLY)

SCALE NTS

DESD. U.KALE DATE CHKD. DATE

DRN. R.JAIN DATE APPD. DATE

SHEET

DRG.NO.: RRCAT/IRFEL/MOD/PT/04

SKETCH NO. ECE-2015/08/04/RJ/0022

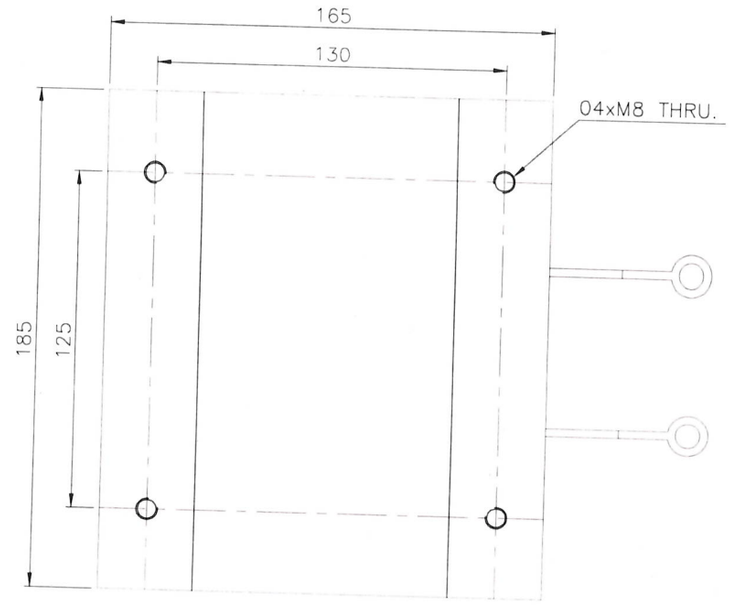

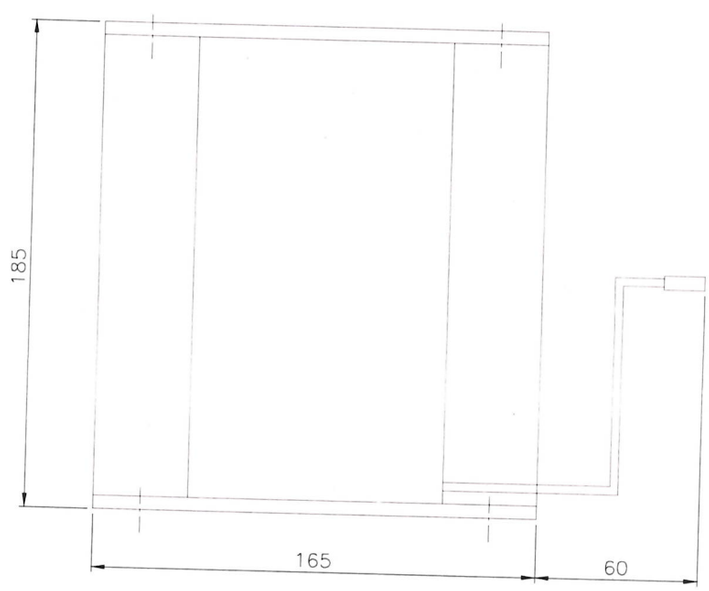

QTY 1No.

04/03/2022

ALL DIMENSIONS ARE IN mm
REMOVE ALL SHARP EDGES & CORNERS

GENERAL TOLERANCES
LINEAR DIMENSIONS
0 TO 30 : 0.2
30 TO 315 : 0.5
315 TO 1000 : 0.8
1000 TO 2000 : 1.2
HOLE H12 SHAFT h12
UNLESS OTHERWISE SPECIFIED
THE SURFACE FINISH SHALL BE ✓

GOVERNMENT OF INDIA
R.R CENTRE FOR ADVANCED TECHNOLOGY
ACCELERATOR PROGRAMME
INDORE-452 013

TITLE	BIASING INDUCTOR (PULSE TRANSFORMER ASSYEMBLY)			SCALE NTS
DESD. U.KALE	DATE	CHKD.	DATE	
DRN. R.JAIN	DATE	APPD.	DATE	SHEET
DRG.NO.: RRCAT/IRFEL/MOD/PT/07				

SKETCH NO. RCT-2015/09/04/R./0025

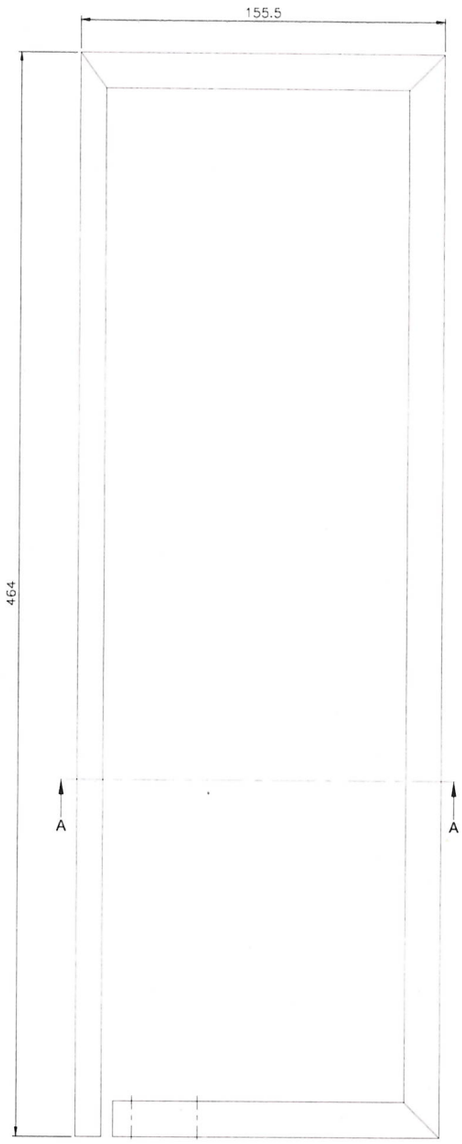

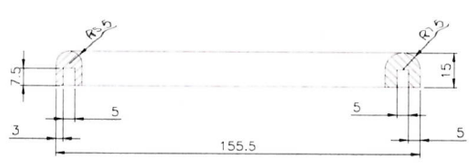

SECTION A-A

QTY : 2Nos.

MAT: COPPER /ALUMINIUM

04/03/2022

ALL DIMENSIONS ARE IN MM
REMOVE ALL SHARP EDGES & CORNERS

GENERAL TOLERANCES

LINEAR DIMENSIONS

0 TO 30	± 0.2
30 TO 315	± 0.5
315 TO 1000	± 0.8
1000 TO 2000	± 1.2

HOLE : H12 SHAFT H12

UNLESS OTHERWISE SPECIFIED THE SURFACE FINISH SHALL BE

GOVERNMENT OF INDIA

R R CENTRE FOR ADVANCED TECHNOLOGY

ACCELERATOR PROGRAMME

INDORE-452 013

TITLE	CORONA RING (PULES TRANSFORMER ASSYEMBLY)		SCALE NTS
DESD. U.KALE	DATE	CHKD.	DATE
DRN. R.JAIN	DATE	APPD.	DATE
DRG.NO.: RRCAT/IRFEL/MOD/PT/13			SHEET

SKETCH NO. ECE-2015/10/04/RJ/0028

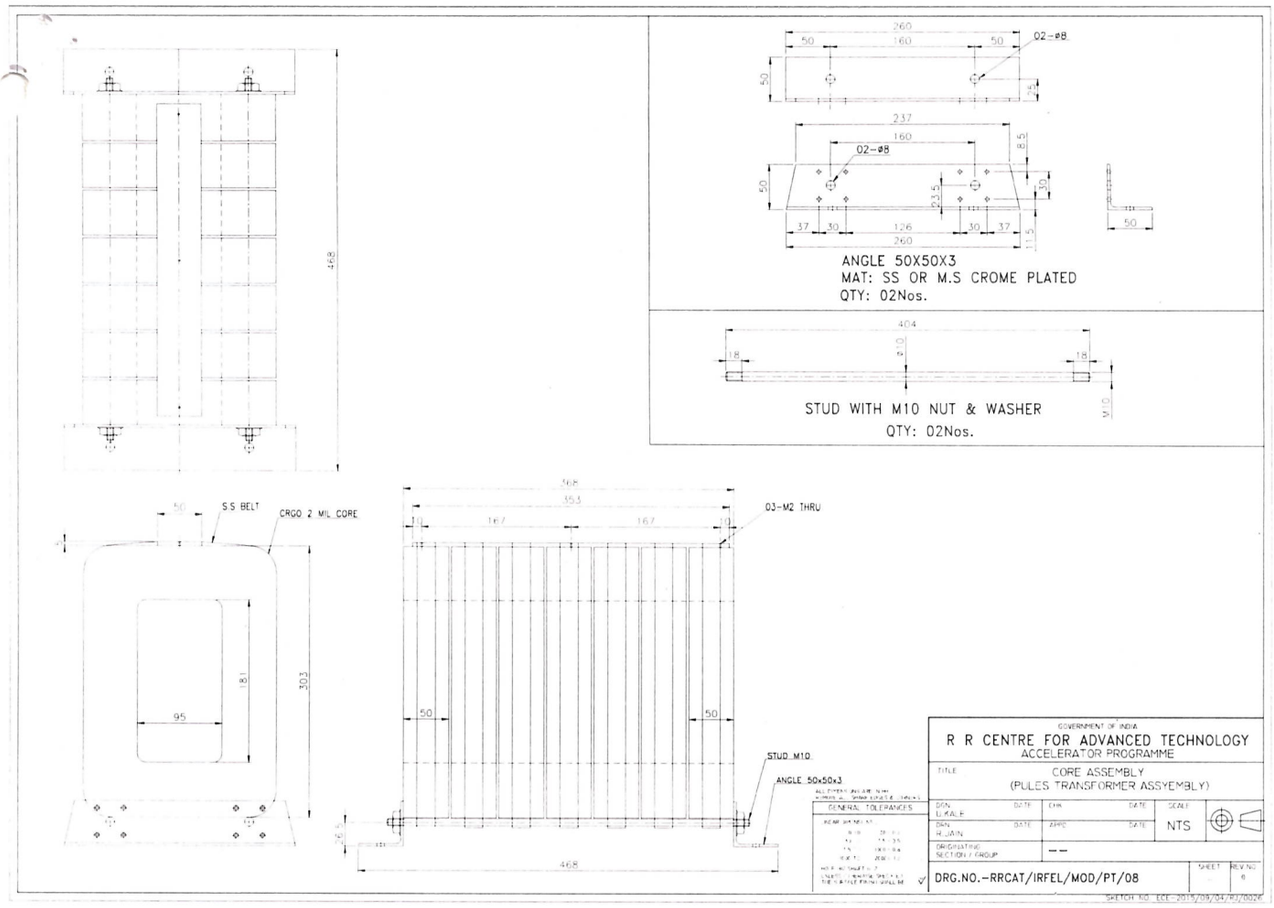
ANGLE 50X50X3
MAT: SS OR M.S CROME PLATED
QTY: 02Nos.
STUD WITH M10 NUT & WASHER
QTY: 02Nos.
S.S BELT
CRGO 2 MIL CORE
03-M2 THRU
STUD M10
ANGLE 50x50x3
GOVERNMENT OF INDIA
R R CENTRE FOR ADVANCED TECHNOLOGY
ACCELERATOR PROGRAMME
TITLE
CORE ASSEMBLY
(PULES TRANSFORMER ASSYEMBLY)
SCALE
NTS
DRG.NO.-RRCAT/IRFEL/MOD/PT/08

04/03/2022

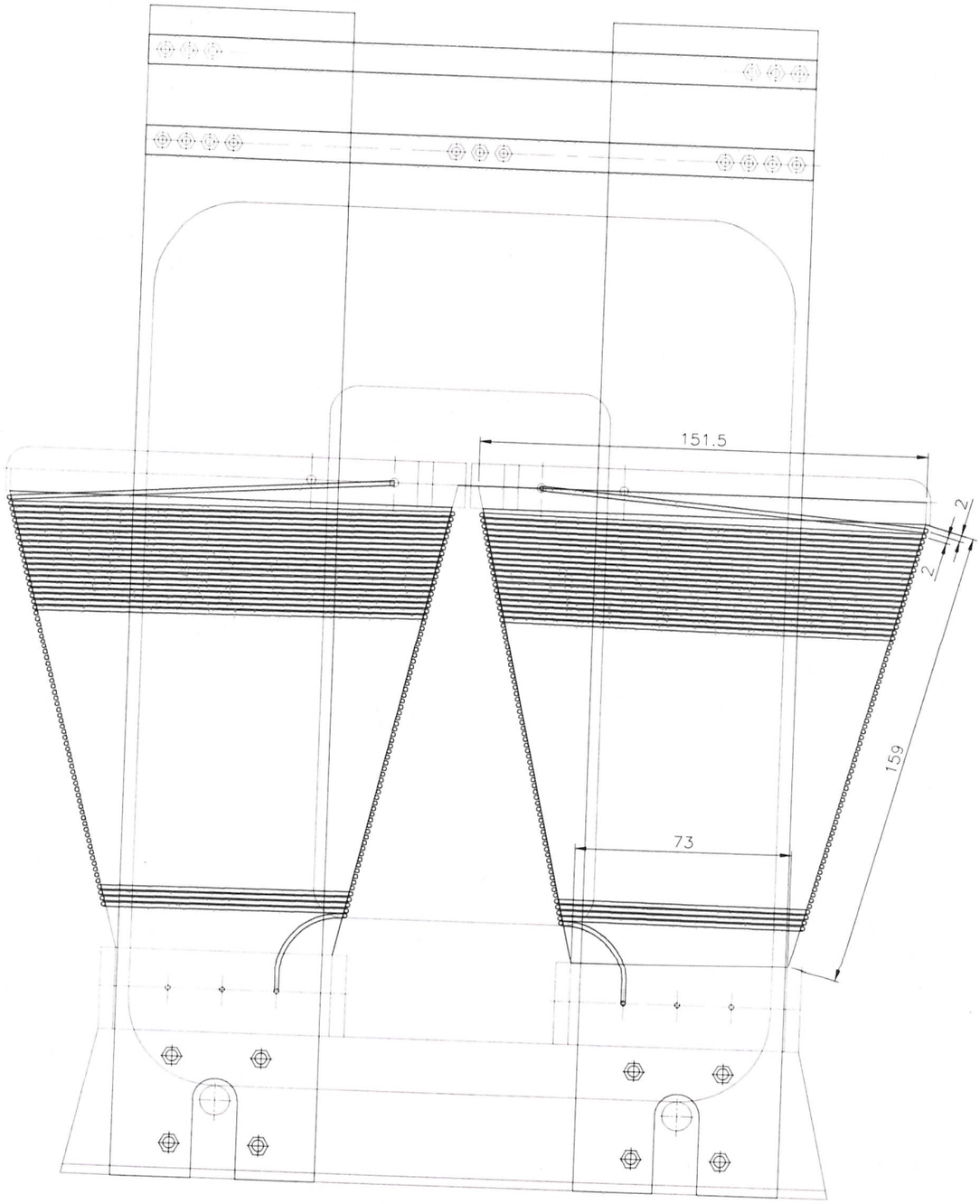

SECONDARY WINDING DETAILS

NO. OF TURNS: 70

WIRE SIZE : 17 SWG

04/03/2022

ALL DIMENSIONS ARE IN mm
REMOVE ALL SHARP EDGES & CORNERS

GENERAL TOLERANCES
LINEAR DIMENSIONS
6 TO 30 ± 0.2
30 TO 315 ± 0.5
315 TO 1000 ± 0.8
1000 TO 2000 ± 1.2
HOLE NO. SHAFT NO.
UNLESS OTHERWISE SPECIFIED
THE SURFACE FINISH SHALL BE ✓

GOVERNMENT OF INDIA
R R CENTRE FOR ADVANCED TECHNOLOGY
ACCELERATOR PROGRAMME
INDORE-452 013

TITLE SECONDARY WINDING (PULSE TRANSFORMER ASSYEMBLY)			SCALE NTS
DESD. U.KALE	DATE	CHKD.	DATE
DRN. R.JAIN	DATE	APPD.	DATE
DRG.NO.: RRCAT/IRFEL/MOD/PT/12			SHEET

SKETCH NO. ECE-2015/30/03/RJ/0016

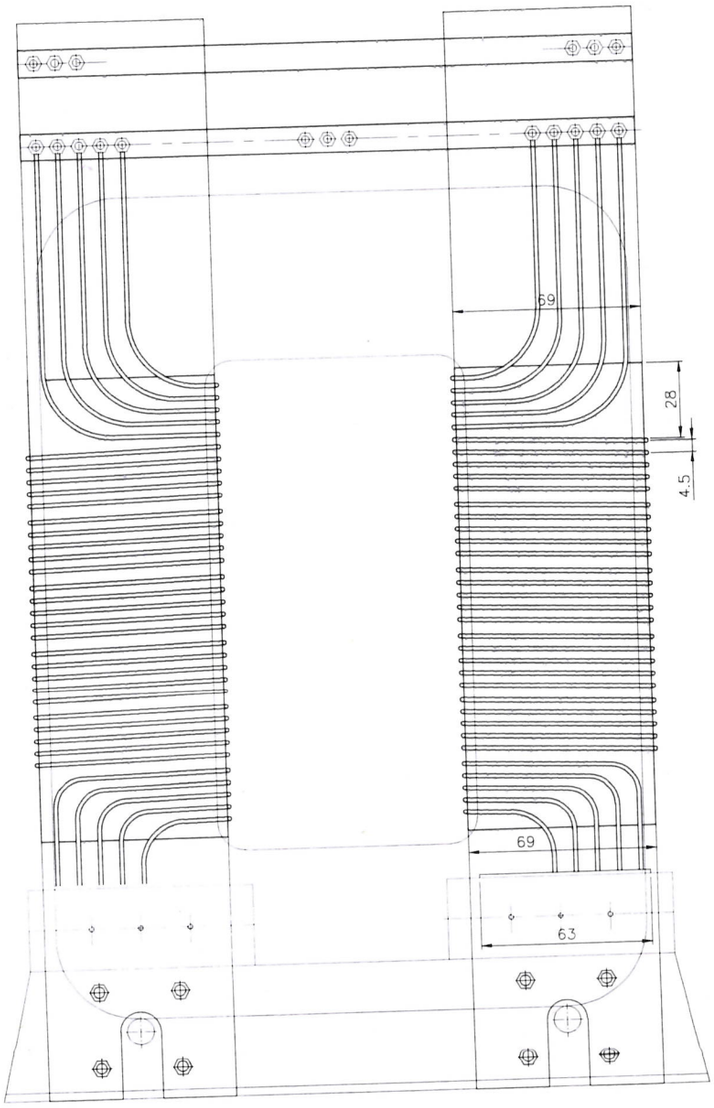

PRIMARY WINDING DETAILS

NO. OF TURNS: 05

NO. OF PARALLEL CONDUCTORS: 05

WIRE SIZE : 17 SWG

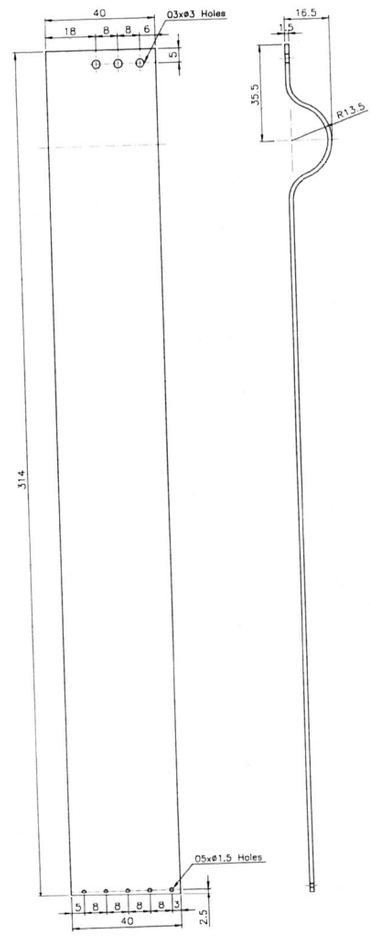

(PRIMARY GROUNDING PLATE)
QTY: 02Nos.
MAT: Copper

Ronade 04/03/2022

ALL DIMENSIONS ARE IN mm
REMOVE ALL SHARP EDGES & CORNERS

GENERAL TOLERANCES

LINEAR DIMENSIONS	
0 TO 3.15	± 0.2
3.0 TO 3.15	± 0.5
3.15 TO 10.0	± 0.8
10.0 TO 20.0	± 1.2

HOLE HIT SHAFT H12
UNLESS OTHERWISE SPECIFIED
THE SURFACE FINISH SHALL BE ✓

GOVERNMENT OF INDIA
R R CENTRE FOR ADVANCED TECHNOLOGY
ACCELERATOR PROGRAMME
INDORE 452 013

TITLE	PRIMARY WINDING (PULES TRANSFORMER ASSYEMBLY)			SCALE	NTS
DESD. U.KALE	DATE	CHKD.	DATE		
DRN. R.JAIN	DATE	APPD.	DATE	SHEET	
DRG.NO.: RRCAT/IRFEL/MOD/PT/10					

SKETCH NO. ECE-2015/30/03/RJ/0015