सत्यमेव जयते

Government of India
Bhabha Atomic Research Centre
Accelerator and Pulse Power Division
Mumbai – 400 085, INDIA

EBC, Kharghar

Ref. No.: BARC/APPD/RB/2016/451

Date: 26/12/2016

Subject: Inviting quotations for **"Fabrication of trolley, product carrying tray and motor fixing support"** as per technical specifications sheet attached in Annexure – I.

Dear Sir,
On behalf of the President of India, you are invited to quote of **""Fabrication of trolley, product carrying tray and motor fixing support"** as per technical specifications sheet attached in Annexure – I. Terms & conditions are given below.

S. No.	Description of the Job	Quantity
1.	**"Fabrication of trolley, product carrying tray and motor fixing support"** as per technical specifications sheet attached in Annexure – I	01 No

Terms and Conditions:

1. The supplier should quote for fabrication of the items, including the cost of the materials.
2. The material will be inspected before the start of the fabrication.
3. The quotations should have the minimum validity period of two month.
4. BARC being a Government organization is exempted from payment of excise duty and Octroi duty. However, excise duty exemption / Octroi duty exemption certificates will be issued if required. Sales Tax (VAT) will be applicable.
5. Supplier should submit their offers in their letterhead, placed in sealed envelop super scribed with the above mentioned Reference No., due date and Title **"Fabrication of trolley, product carrying tray and motor fixing support"** as per technical specifications sheet attached in Annexure – I, addressed to Project Manager, Electron Beam Centre, Rain Tree Marg, Sector- 7, CBD Belapur, Near Bharatiya Vidtapeeth Engineering College (Kharghar), Navi Mumbai-400614, **on or before 16-01-2017**. The quotation should contain the following details like (i) Period of validity, (ii) terms and conditions of offer, (iii) Approximate period of completion of job, (iv) Copies of registration and income tax clearance certificates, (v) PAN, VAT, registration no and Company's seal with proprietor signature. The quotation containing above information should reached to us before due date by **SPEED POST ONLY**, no courier and other mode of delivery will be accepted.

6. The fabrication of the item shall be subjected to inspection by our Scientists / Engineers at the supplier's works. Necessary inspection facilities should be provided to them during fabrication at the supplier's premises. The purchaser has the right to make the minor modifications in the design and drawings. Additional charges will not be admissible for such minor modifications, if any. The item should be delivered to us at EBC Kharghar, Rain tree Marg, Sector 7, CBD Belapur, Navi Mumbai, after approval by our Scientists / Engineers.

7. Please note that shorter delivery period will be preferred. For any clarifications you may contact, Shri Rajech Barnwal (e-mail: rbarnwal@barc.gov.in) APPD, BARC on Tel No.27524564 or Shri R.B.Chavan (e-mail: rbchavan@barc.gov.in) APPD, BARC on Tel No. 27524569.

8. Payment will be made only after delivery and satisfactory completion of the work to the above-mentioned address and approval by our Scientists / Engineers as per BARC rules.

Forwarded by

Kavita P. Dixit

(Smt Kavita P. Dixit)
Head RL&PSS, APPD, BARC

श्रीमती कविता पी. दिक्षित / Smt. Kavita P. Dixit
अध्यक्ष, आरएफ रैखिक त्वरित्र तथा शक्ति प्रणाली अनुभाग
Head, RF Linac and Power Systems Section
त्वरक एवं स्पंद शक्ति प्रभाग
Accelerator & Pulse Power Division
भारत सरकार / Government of India
भाभा परमाणु अनुसंधान केन्द्र, मुंबई - 400 085.
Bhabha Atomic Research Centre, Mumbai - 400 085.

Approved by

RKRajawat 29/12/2016

R.K.Rajawat
Head APPD, BARC

श्री. आर. के. राजावत / Shri R. K. Rajawat
अध्यक्ष, त्वरक एंव स्पंद शक्ति प्रभाग
Head, Accelerator & Pulse Power Division
भारत सरकार / Government of India
भाभा परमाणु अनुसंधान केन्द्र, मुंबई - 400 085.
Bhabha Atomic Research Centre, Mumbai - 400 085.

Copy to: Accounts Officer,
GSS Section,
Central Complex, BARC.

Annexure – I

The technical requirements of the work covers the details under the single trolley based product conveyor system drive by stepper motor and sprocket chain mechanism placed on the two rails. For carrying the product an aluminum tray is placed on the trolley which will be used to irradiate the product under electron beam accelerator window. The following scopes of the work are included under this fabrication:

1) Procurement, assembly and alignment of 6 numbers of rails of size 50mmX 25mm and 1.75m long.

2) Fixing of stepper motor with proper support and bracket in the trolley with driving mechanism of sprocket and chain type of size 3" to drive the trolley wheels. Sprocket chain mechanism, support, bracket, angles required will be in the scope of fabricator. The necessary machines required for cutting, fitting, finishing etc will be in the scope of fabricator.

3) Procurement, assembly of new worm and worm gear mechanism in the trolley movable platform for setting at different height. The size of the worm and worm gear system should be suitably selected to lift the load of about 250Kg.

4) The manual lever is to be provided with locking arrangement to set the platform at desired height.

5) Procurement of raw material, fabrication, welding and finishing of product carrying tray as per detail attached.

6) The entire conveyor system including trolley, rails, support, bracket, tray etc should be painted with reputed paint make like Asian Paint. There should be at least two coat of primer before making the final paints.

7) All the work of fabrication is to be carried out at our EBC Kharghar site for better understanding of work at the site.

8) Fabrication work quality is to be inspected by the site BARC Engineer before giving final satisfactory completion of job. Any minor modification will be admissible in the scope of the work.

9) All the brought out items like rails, sprocket chain mechanism, worm and worm gear mechanism will be of good quality and test certificate has to be produced before giving acceptance of the material.

10) Fabricators may visit the site at EBC kharghar for better estimation and understanding of work before giving their final quotation.

PSCharan

Rajesh Bamwal

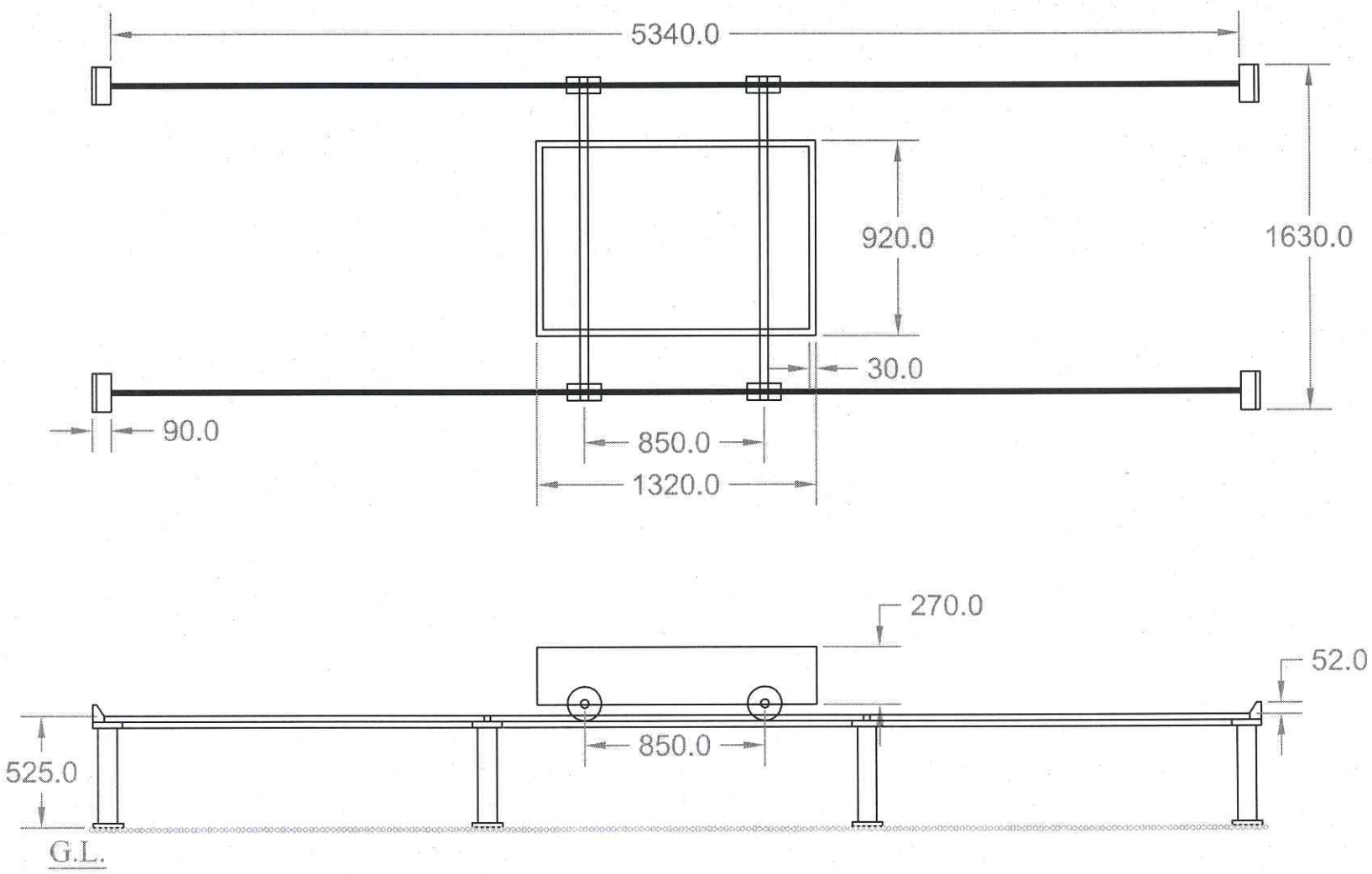

TO AND FRO CONVEYOR ASSEMBLY

ALUMINUM TRAY SKETCH

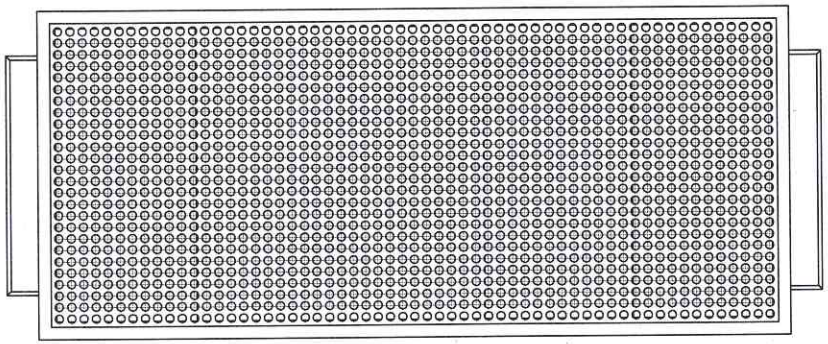

TOP VIEW

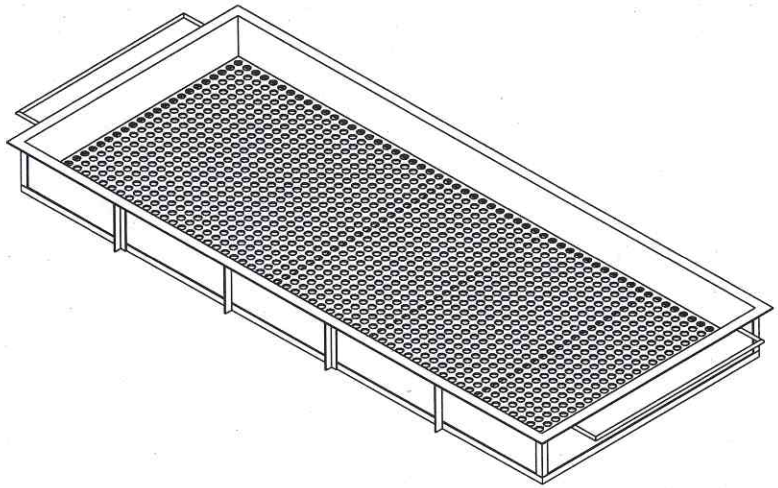

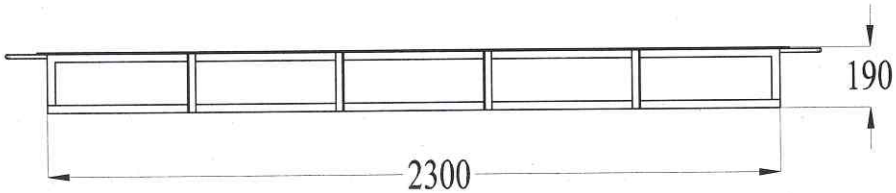

FRONT VIEW

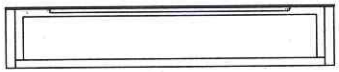

SIDE VIEW

RSChora

Raynda